duma rent

www.duma-rent.com

MANIACCESS 150 AETJ L

Self-propelled electric articulating boom lift

- Working height : 15.30 m
- Max. outreach : 7.80 m
- Up and over : 7.00 m
- Weight : 5 910 kg

MANITOU

150 AETJ L

Working height .....15.30 m
Platform height .....13.30 m
Horizontal outreach .....7.80 m
Up and over clearance .....7.00 m
Jib movement .....+70° / -70°
Basket rotation.....140°
Turret rotation .....355°

Platform capacity.....230 kg/2 peoples
External use.....45 km/h
(Maximum allowed wind speed)
Basket size .....1.20 x 0.96 m

❶ **Width** .....1.75 m
❷ **Length**.....5.96 m
❸ **Stowed length** (storage) .....4.40 m
❹ **Height** .....1.97 m
❺ **Stowed height** (storage) .....2.08 m

❻ **Turning radius inside** .....1.97 m
❼ **Turning radius outside** .....4.27 m
❽ **Turning radius outside** (basket).....4.89 m
❾ **Ground clearance** .....0.14 m
❿ **Wheel base** .....2.00 m
Drive speed.....5.0 km/h
Working speed .....0.6 km/h

Gradeability.....26%
Maximum slope accepted .....5% or 3°

Weight.....5 910 kg

Tires.....0.60 x 0.19 m
Wheel steer.....2 (front)
Wheel drive.....2 (back)

Batteries.....300 Ah / 2x24 V
Battery charger.....45 Ah / 48 V

Standard equipment

- Protected control basket panel
- Electrical battery traction
- Negative brakes
- Lifting brackets
- Hour meter
- Warning buzzer in the basket
- 220 V predisposal
- Voltage indicator
- Safety manual pump
- Basket with mesh floor
- Bus CAN technology
- Diagnostic help integrated
- Dual electrical motors
- Integrated charger

Options

- Rubber and no marking tires
- High capacity battery (360 Ah)
- Electric plug in the platform with circuit breaker (230 V)
- Flashing light
- Drive alarm
- All motion alarm

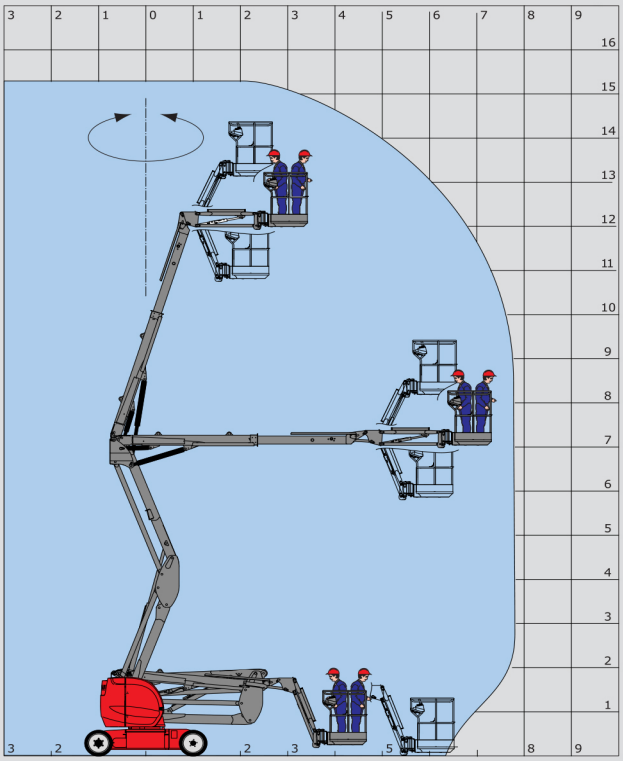

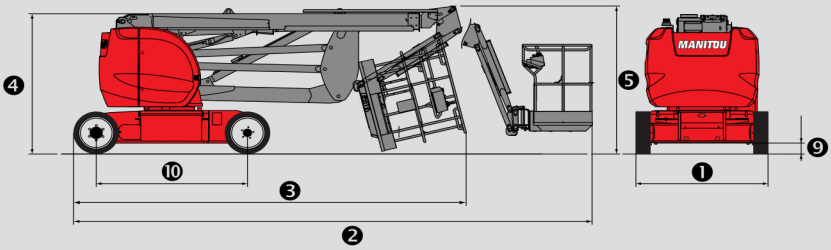

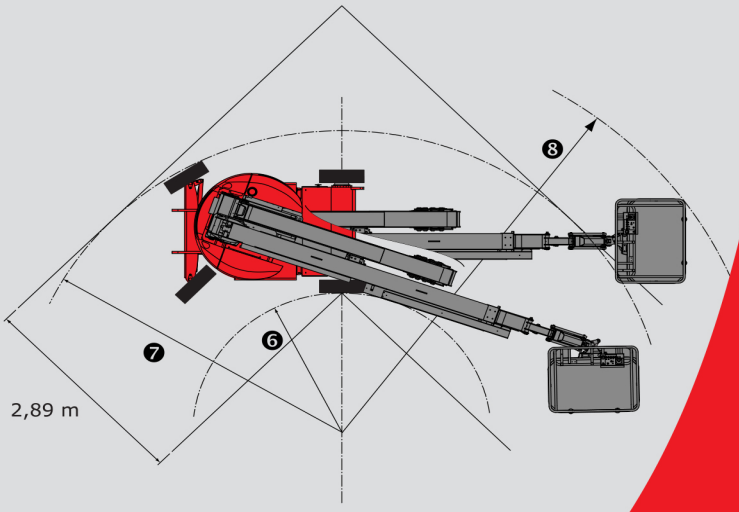

The equipment supplied with each model may differ from that described in this leaflet.
For more details, contact your MANITOU dealer

MANITOU BF SA
B.P. 249 - 44158 Ancenis Cedex - France
Tél. : 33 2 40 09 10 11 / Export Department Fax : 33 2 40 09 10 97
www.manitou.com

700345EN